IC-202

2 METER BAND SSB TRANSCEIVER

INSTRUCTION MANUAL

ICOM

TABLE OF CONTENTS

SECTION I INTRODUCTION

Congratulations on the purchase of the IC-202, portable 2 meter SSB transceiver. The IC-202 was designed to be operable anywhere like most portables, but we also included features like a very effective noise blanker, RIT, S&RF meter, and a full 3 watts output. Two built-in crystals in the stable VXO allow operation between 144.0 and 144.4 MHz. If you wish to expand the range of the IC-202, we have also provided 2 spare crystal sockets for your convience. With a slight retuning of the IC-202, and installation of a special crystal, you may also work through Oscar or USB.

The aluminum die cast frame provides a very strong yet light housing for the 2 circuit boards, and the aluminum sides snap off easily if service is necessary or to change the batteries.

The IC-202 operates on 9 inexpensive C cell batteries, or on an external 13.8V DC source. We recommend the IC-3PS which not only provides power for the IC-202, but also doubles as a stand and holder for the IC-20L 10 watt linear amplifier.

You can use the built-in whip antenna for portable use or another antenna connects to the external antenna connector on the back of the IC-202.

We are sure that you will have years of lasting enjoyment from your IC-202, manufactured by the leader in communication equipment: Inoue Communication Equipment Corporation.

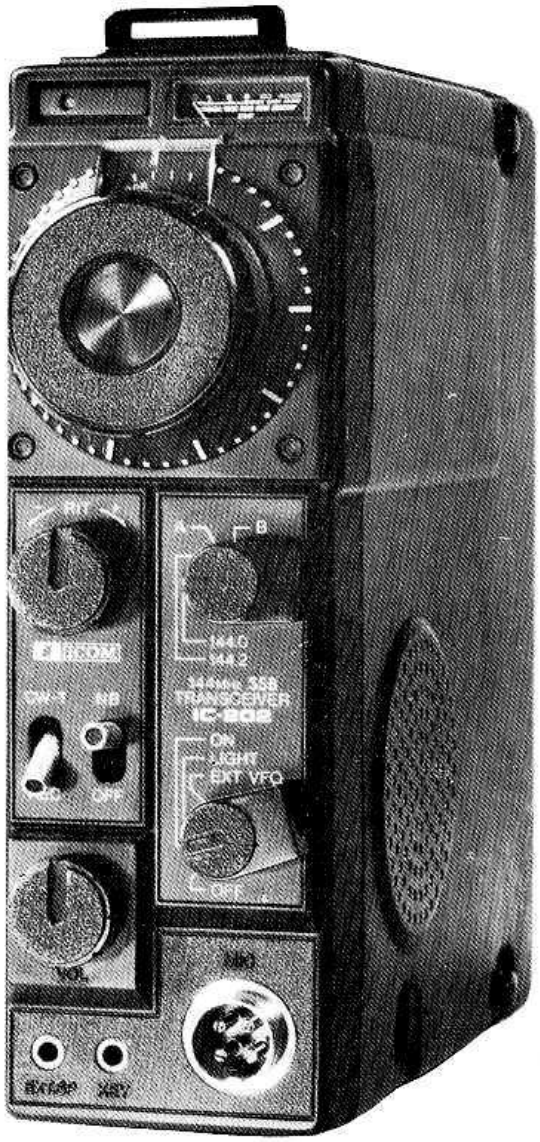

SECTION II SPECIFICATIONS

GENERAL:

Number of Semi-Conductors	Transistor	19	
	FET	7	
	IC	7	
	Diodes	33	
Frequency Coverage	144.00–145.00MHz		
Frequency Stability	±200Hz/HR @25°C		
Modulation Type	(A3J), (A1)		
Antenna Impedance	50 ohms unbalanced		
Power Supply	DC13.8V±15%		
Current Drain	Negative Ground Transmitting:		
		A3J	Approx. 540mA
		A1	Approx. 750mA
	Receiving at Max. Audio Output:		Approx. 250mA
	with no signal:		Approx. 90mA
	Dial Light:		Approx. 40mA
Dimensions	183mm(H) x 61mm(W) x 162mm(D)		
Net Weight	2.0Kgs including batteries		

TRANSMITTER:

Frequencies	144.00–145.00MHz	
	2 Crystal built-in for 144.00–144.40MHz. Each Crystal for continous coverage of 200KHz. Two spare crystal sockets. Connection with external VFO available.	
Modulation Type	A3J (USB) and A1	
RF Output Power	A3J	3W(PEP)
	A1	3W
Carrier Suppression	Better than 40dB	
Opposite Side Band Suppression	Better than 40dB/1KHz	
Spurious Radiation	Better than -60dB	
Modulation System	Balanced Modulation	
SSB Producing System	Filter Type	
Microphone Impedance	600 ohms	

RECEIVER:

Frequencies	Same as Transmitter
Modulation Type	A3J(USB) and A1
Receiving System	Single Super Heterodyne
Intermediate Frequency	10.7MHz
Sensitivity	0.5μV at (S + N)/N 10dB or better
Spurious Sensitivity	Better than -60dB
Selectivity	± 1.2KHz or better at -6dB
	± 2.4KHz or better at -60dB
Audio Output	More than 1W
Audio Output Impedance	8 ohms

SECTION III ACCESSORIES

Various accessories are packed with your transceiver. Be sure not to overlook anything. Also it's a good idea to keep packing cartons in case of moving or it return for service is necessary.

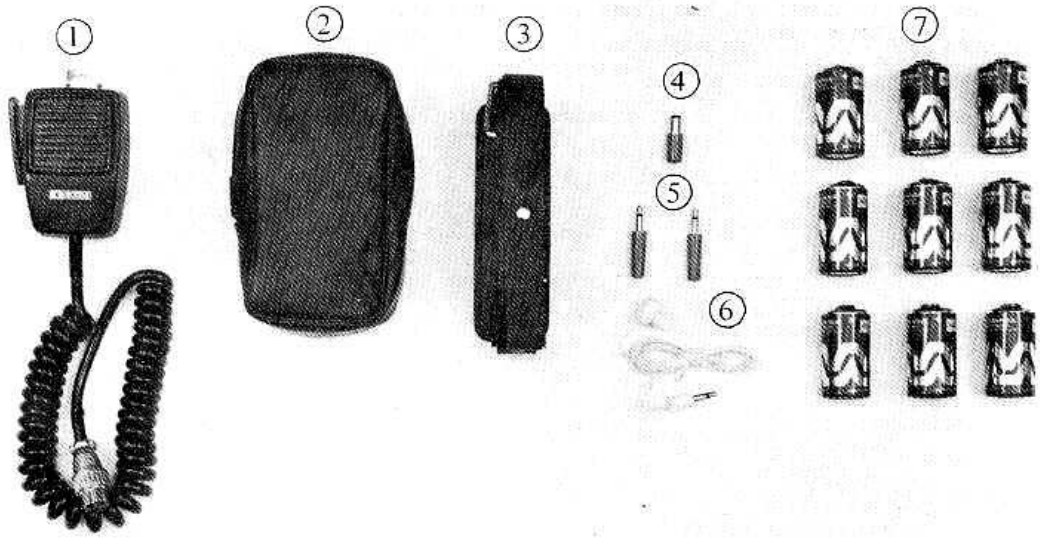

1.	Dynamic Microphone	1	5.	Ext. Speaker Plug, Key Plug	2
2.	Microphone Case	1	6.	Earphone	1
3.	Sholder Strap	1	7.	Dry Cells Type "C"	9
4.	Power Supply Plug	1			

SECTION IV PRE-OPERATION

Battery instalation

Place the function switch in the off position. Remove the side that covers the battery case and speaker. Carefully install the batteries in the manner shown on the bottom of the battery case. Take care in observing correct polarity.

Place the batteries on top of the ribbon so when the batteries need to be removed a simple pull on the ribbon will make removal easier. Place batteries in the center column last. Do not force the batteries in place. With the batteries properly in place, carefully replace the side cover.

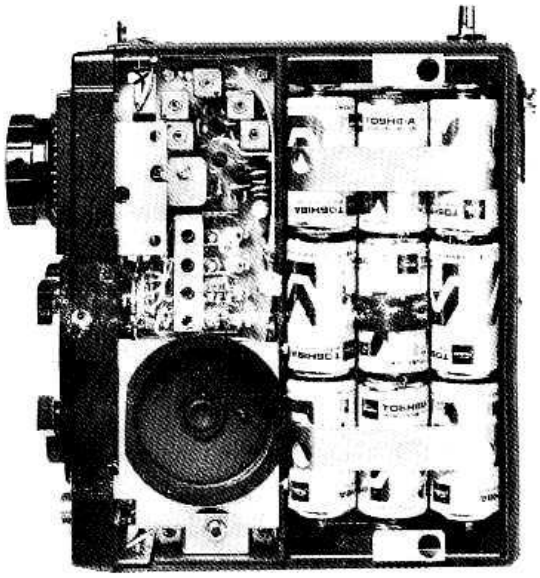

SECTION V DESCRIPTION OF CONTROLS AND CONNECTIONS

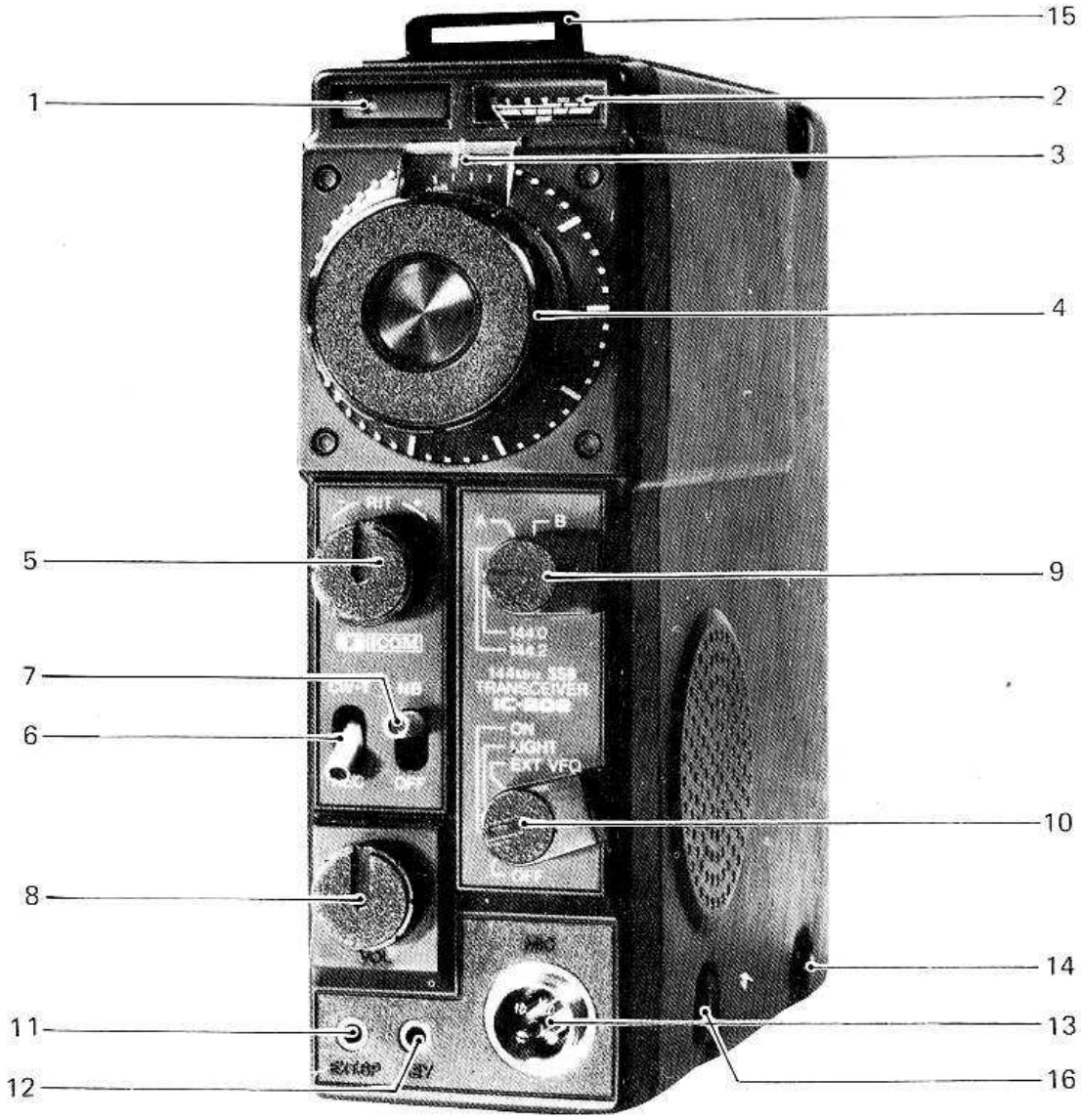

1. Power indicator LED
   Shows when power is applied to the IC-202.

2. S & RF meter
   Indicates the relative signal strength of receive signals and output power of transmitted signals.

3. Dial scale
   The dial is devided into 10HZ increments with a total coverage of 200KHz. The operating frequency is read by adding the frequency shown on the dial with that shown on the crystal switch, or in case of the spare crystals, by adding the dial reading to the frequency of the crystal installed.

4. Tuning Knob
   Selects the Frequency.

5. RIT
Independently swings the receiver frequency ± 3KHz so that signals that are slightly off frequency may be tuned for clarity without affectiong the transmitting frequency.

6. Mode Switch
In the CW-T position the transmitter will transmit when the CW key makes contact. In the REC position both SSB and CW signals can be received. In the CW-T position the microphone is deactivated from the circuit.

7. Noise Blanker Switch
In the NB position, the noise blanker is put into the circuit and noise pulses will be reduced.

8. Volume
Controls the audio output level.

9. Crystal Switch
Selects the crystal to be used in the VXO.

10. Function Switch
Turns the power on and off and in the light position, turns on the meter light. In EXT VFO position, the frequency of the IC-202 can be controlled by an external VFO.

11. External speaker Jack
An external speaker can be connected here. The impedance of the speaker should be 8 ohm. With the external speaker connected, the built-in speaker will be disabled.

12. Key Jack
A key for CW transmission is connected here.

13. Microphone Connector
A 500 ohm microphone is connected here.

14. Snap-Locks
Convenient snap-locks hold the sides in place. To remove them for any service or to replace the batteries, simply pull out on the center of the snap-locks and the cover can easily be removed. When replacing the covers be sure that you have placed the covers properly in the grooves provided, then push down on the center of the snap-lock. Note: when the sides are placed in the grooves, the snap-lock center must be pulled out.

15. Shoulder strap bracket.
Connect the shoulder strap here for easy carrying.

16. External VFO Socket
Accepts plug from an external frequency source.

17. Whip antenna
The built in whip antenna must be fully extended for best operation. Use care when expanding or compressing the antenna.

18. Microphone Hanger
When not in use, the mic can be placed here out of the way.

19. External Power Supply Jack
Any well regulated power supply with an output of 13.8 volts can be connected here instead of using the batteries installed. Inserting the power plug into the jack disables the internal battery source.

20. External Antenna receptable
An external antenna of 50 ohms impedence can be connected here. If an external antenna is used, the built-in whip should be completely collapsed.

21. Identification plate
States model number and serial number.

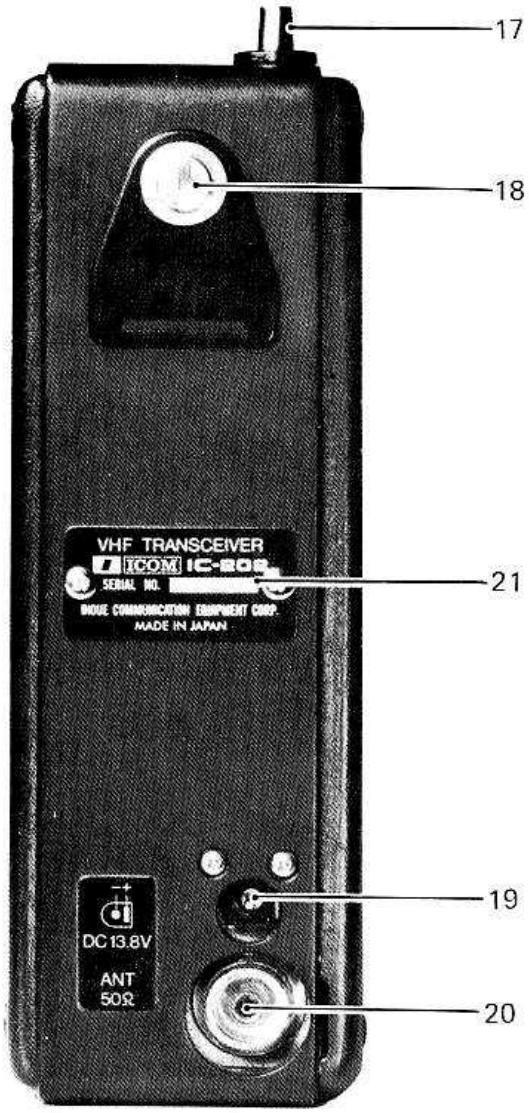

SECTION VI OPERATION

1. After the batteries have been installed, or the IC-202 is connected to an external source, turn the function switch on. If the surrounding light is too dim to see the S & RF meter, turn the switch to the LIGHT position, and the meter will be illuminated.

2. Extend the whip antenna to it's full length, or if you wish to use and external antenna, connect the cable to the EXT antenna connector on the back of the IC-202.

3. Connect the microphone to the MIC jack on the front panel.

4. If you wish to use the CW mode of transmission, connect a key to the KEY jack on the front panel. You do not have to disconnect the microphone for CW operation.

5. Place the mode switch in the proper position for the portion of the 2 meter band you wish to operate in, whether it be CW or SSB. If you wish to operate outside of the 144.0–144.4 MHz portion of the band, if will be necessary for you to install an additional crystal in one of the spare crystal sockets provided for this purpose. See page 7 for an explaination of how this is done. Crystals can be ordered form your authorized ICOM authorized distrubutor or his stocking dealer.

6. Turn the tuning knob until you reach the desired frequency or a signal is heard. Adjust the volume control for a comfortable level of listening. If operating SSB, you may wish to place the Noise Blanking switch in the NB position. This activates the noise blanking circuit which will supress noise pulses. After selecting the operating frequency, if the received signal seems to drift, adjust the RIT control until the signal is again clear.

7. For SSB operation, hold the microphone close to your mouth, push the PTT switch on the microphone, and speak in a clear normal tone of voice.
For CW operation, after connection of your KEY, place the CW-T switch in the CW-T position and the IC-202 will transmit when the KEY contacts are closed. To receive, place the switch back in the REC position.

8. For operation with an External VFO, remove the rubber plug in the side of the IC-202, and insert a suitable plug from the VFO, and place the function switch in the EXT VFO position.

A/B POSITION SPARE CRYSTALS

The IC-202 comes with 2 crystals installed in the VXO for operation between 144.0 – 144.4 with each crystal covering 200 KHz. If you wish to work another part of the 145MHz band all that is needed is to install the proper frequency crystal in either the A or B spare crystal socket, tweek it, and you're ready for operation. Also a crystal can be installed to work the 145.8–146.0 portion of the band if you want to use OSCAR.

INSTRUCTIONS FOR INSTALATION

Crystals 36-1 and 36-2 are already installed in the crystal sockets. These are for 144.2 (36-1) and 144.2–144.4 (36-2). Installing additional crystals in the spare crystal sockets in some positions and/or combinations may cause the output level of the operating crystal to decrease. This is due to absorption of some of the energy by the adjacent crystal.

BE SURE TO FOLLOW THE CHART EXACTLY AS TO POSITION AND COMBINATION OF THE SPARE CRYSTALS TO OBTAIN OPTIMUM PERFORMANCE.

SPARE SOCKET		XTAL NUMBER	COMBINATION			
A	B	36–	3	4	5	6
O	X	3	–	O	X	O
X	O	4	O	–	O	O
O	O	5	X	O	–	X
O	O	6	O	O	X	–

O = Possible

For other combination of crystals than those listed in the chart, and for crystals for frequencies other than those listed, a slight modification or realignment will probably be required. For communication through OSCAR (145.8–146 MHz USB) realignment of various parts besides the readjustment of the oscillator frequency will be necessary.

CIRCUITS

Section IX shows a block diagram of the IC-202.
The receiving section is a single conversion super heterodyne, employing a wide band variable crystal oscillator (VXO) as the local oscillator. The transmitting section is a single conversion system which employes a filter-type SSB generator using a 10.7MHz crystal filter and the same local oscillator as the receiving section. A double-balanced mixer is used for the transmitting mixer to minimize spurious radiation. Although a portable unit, the IC-202 also features built-in circuits such as RIT, AGC, ALC, and a noise blanker.

This transceiver can be used with ease outdoors, in the car, or as a fixed station since it may be powered either with it's batteries (C size x 9) or with a 13.8V external source.

RECEIVING CIRCUIT

The signal from the whip antenna or antenna terminal passes through the harmonic filter, through the T/R switching diode D25(MI301) amplified by RF amplifier Q2(MEM 616) and is then fed to the mixer Q3(2SK49) gate.
The switching diode is turned on by T/R control Q1(2SA570), and D25 is turned on with forward voltage bias thus directing the input signal to Q2.

During transmission, the Receiver section + 9V goes to zero to turn off Q1, and forward voltage bias is not applied to D25, while at the same time, the transmit output is switched around Q2 to the antenna system. D25 is turned off as reverse bias is generated when the transmit signal is present.
The 10.7MHz local oscillator output from the VXO is injected to mixer Q3 source. The resultant conversion is an IF Frequency of 10.7MHz.

The IF signal passes through the diode switch D1(MC301) which serves as both transmit-receive switch and noise blanker gate, the IF selectivity is obtained by the 10.7MHz crystal filter, then passes the switching diode D3(MC301) and is amplified up to a suitable level by the IF amplifiers consisting of Q6(MEM616), Q7(MEM616) and IC1(LA1221).
The output of IC1 is applied to the demodulation and AGC circuits.

The demodulation circuit is a ring demodulator composed of D6 to D9(IN60's) which uses the 10.6985MHz from the BFO to generate the resultant audio signal. Higher audio frequencies of the demodulated signal are cut off by a low-pass filter consisting of C39, L11 and C40. The volume control (R–1) adjusts this output level which is fed to AF amplifier IC2(μPC575C2) x providing 1 watt of audio.

The network R32 and D29 provides position bias to IC-2 for muting audio during transmit and silent transmit-receive switching.

NOISE BLANKER

A sample of the IF signal is picked up at the drain of mixer Q3, amplified by IC3 and IC4 (LA1221's), and detected by D10 and D11(IN60's). This detected output is separated into signal audio components, and pulse components (noise). The signal component is amplified by Q5(2SC945) and provides AGC control to IC3.

The noise pulse component turns on Q5(2SC945), and as long as noise exists, turns off

D1 by grounding the anode of the noise blanker gate diode D1, thus the noise component is not transferred to the crystal filter.

AGC CIRCUIT

A part of the IF signal is picked up from the IF amplifier IC1 and passes through C73 and R39 to be detected by D13(1N60), D14 and D15(1S247's). When no signal is received, bias voltage is applied to the base of AGC control Q11(2SC945) through R51, D14 and D13, and the potential at the emitter of Q11 goes to nearly zero.

In the presence of a signal, C69 which is connected to Q11 base is first negatively charged because D14 is turned on, and so Q11 is turned off. Also, C70 which is connected to Q11 emitter is negatively charged through D15 up to a voltage determined by the loop gain of each amplifier of RF and IF, and C70 is kept at the achieved voltage due to the absence of discharge circuit.

When the signal diminishes, the negative voltage charged in C69 is gradually discharged through R51 and drops down to a voltage where Q11 is turned on. Then the negative voltage charged in C70 is rapidly discharged through Q11, thus the AGC time constant of an attack and slow release is effected.

TRANSMITTING CIRCUIT

The small electrical signal from the microphone is adjusted by the mike gain adjustment R61. Higher or lower frequencies outside desirable communication frequency range are attenuated by R65, C80 and C79, and the remaining frequencies are amplified by AF amplifier IC5(BA301).

This AF signal and BFO output(10.6985MHz) are fed to the balanced modulator IC6 (SN76514N). The resulting carrier suppressed double sideband signal is amplified by IF amplifier Q16(2SK19). The unwanted side band is then removed by the 10.7MHz crystal filter where it passes through the diode switch D2(MC301) to become a 10.7MHz SSB(USB) signal.

This 10.7 signal passes the diode switch D4(MC301) to the transmit mixer IC7 (SN7614N). The L.O. of 133MHz from VXO unit is then combined to become the SSB (USB) signal of 144MHz. The transmit mixer IC7 is a double-balanced mixer, which minimizes spurious radiation.

In addition, the output circuits of IC7 and the 144MHz amplifier Q17(MEM616) provides a band-pass filtering which further minimizes spurious radiation. This 144MHz SSB signal is linearly amplified by Q18(2SC383), Q19(2SC998), and Q20(2SC1947) respectively. Higher harmonics are suppressed by the low-pass filter composed of L27, L28 and C140 to C144. The resultant output power is 3 Watts PEP. PA Q20 idling current is adjusted by R90. It is preset at 30mA at the factory.

ALC CIRCUIT

The ALC (Automatic Level Control) circuit picks out a part of the drive stage Q19 output, rectifies it by D20(1S2473) and D21(1N60), and applies the obtained negative voltage to the transmit IF amplifier Q16 gate to control circuit gain.

CW TRANSMISSION

For CW transmission, the voltage exerted on AF amplifier IC5 is reduced at the same time the voltage to BFO frequency shift switch Q8's(2SC945) base is also reduced to turn it off so that C62 is in series as a part of the BFO crystal oscillator to shift the frequency about 1 KHz upward, which is within the crystal filter passband. Also, at the same time, the 5th Pin of the balance modulator, IC6 is applied with a voltage, which makes the modulator unbalanced, so that the BFO frequency appears unsuppressed at the output. Consequently, these signals are amplified by the transmit IF amplifier Q16 and pass through the crystal filter, transmit mixer IC7 and forward as in the SSB mode. Keying is done by Q17 source and Q18 emitter.

COMMON CIRCUIT

BFO

The BFO is a non-adjustable oscillator using Q9(2SC945). The crystal unit X1 has a load capacity of 25pF and operates at 10.6985MHz in the SSB mode. The change in BFO Frequency is explained under "CW transmission". The BFO output buffer is Q10 (2SC945).

METER CIRCUIT

This circuit permits use of single meter as an S-meter during reception and as an output level meter during transmission.

A bridge circuit composed of R49 and R48 is connected to the power source, stabilized by Zener diode D28(WZ056), and the IF amplifier Q7 source. AGC voltage is generated by input signals reducing Q7's source voltage, thus unbalancing the bridge causing an upscale meter reading.

The S-meter is adjusted for its zero point by R48, and for its full scale point by R50.

For the output level meter, the output detection diode D22(1N60) is coupled with L26 to partly rectify the RF output, thus giving an upscale relative output indication.

The extent of the meter indication can be adjusted by changing the degree of coupling of D22 and L26.

POWER SOURCE AND TRANSMIT/RECEIVE CHANGE-OVER CIRCUIT

The power source voltage(13.8V) supplied from either built-in batteries or external power connected to J10.

This voltage is directly applied to the AF power amplifier IC2 in the receiver section as well as to the collector of Q18, Q19 and Q20 in the power amplifier section.

Other circuits are fed with voltage from the voltage regulation circuits. The voltage regulator circuit for the VFO unit, BFO, and AGC circuits, is derived from 13.8V to the Zener diode D19(XZ076) and power-source indicating lamp D-2 (light-emitting diode TLR-102), resulting in stabilized voltage of about 9.6V which becomes a reference level at D19's cathode. This voltage is applied to Q15's(2SC1209) base, and a regulated voltage of about 9V is available at its emitter.

The brightness of power-indicating lamp varies according to the power voltage when the power voltage drops a level under about 10V, the current to D19 and D2 stops, then D2 goes out. Thus the power voltage fluctuation and battery condition can be judged from the D2 Display, voltage regulator. For the receiving section regulated voltage supply the reference voltage of D19's cathode is applied to Q12's(2SCD355) base through D16 (1S2473), and a regulated voltage of about 9.5V is obtained at its emitter.

When transmitting, R54 is grounded by the microphone PTT switch or mode change-over switch (in the case of CW-T), to make Q12's base voltage zero and output voltage also zero.

Likewise, for the transmit section regulated voltage, the reference voltage of D19 cathode is applied to Q14's(2SB355) base through D18(1S2473), and a regulated voltage of about 9.5V is obtained at its emitter.

During reception, since the PTT switch is not grounded, positive voltage is applied on the transmit/receive change-over control Q13's(2SC945) base through R55 to turn on Q13, while the Q14's base is grounded through R55 and Q13, thus making the power voltage zero. When transmitting, the PTT switch is grounded and theQ13's base is also grounded through D17(1N60) to turn off Q13 and apply the reference voltage to the Q14's base, and so a proper voltage is obtained. Also, the rise time for transmit/receive change-over is delayed by C74 and C75 respectively to prevent transmission signals from entering the receiving section during the change-over operation.

RIT CIRCUIT

During reception, positive voltage is applied to Q22's(2SC945) base through R95 to turn on Q22, and current flows through R18 in VXO unit, RIT control R-2, R97 and Q22. The voltage applied on D1(MV201) of the VXO unit varies by adjusting the RIT control R-2, and D1's capacity varies accordingly, thus enabling the local oscillator frequency (receiving frequency) to be changed.

In the case of transmission, since the voltage on Q22's base becomes zero to turn off Q22 while positive voltage is applied to Q23's(2SC945) base at the same time through R96 to turn on Q23, current flows through R18, R98, and Q23 all within the VXO unit. The voltage divided by R18 and R98 is applied to D1, and so transmission can be made at dial-set frequencies irrespective of the position of RIT control R2. The receiving frequency at the RIT zero point can be corrected by adjusting R98.

VXO UNIT

The oscillator Q1(2SC373) in series with a crystal and variable capacitor, varies its frequency by changing the capacity of the variable capacitor.

Resistors R1 to R4 are damping resistors to prevent abnormal oscillation. Capacitors C31 to C34 are linearity adjusted for nonelinearity of frequency changes caused by the errors of the crystal resonator and variable capacitator.
L1 to L4 and C1 to C4 adjust the oscillation frequency and band width.

In this oscillator, a 14MHz signal is oscillated fundamentally, tripled by Q2(2SC373), tripled again by Q3(2SC763) to a 133MHz signal with the level of 300mV as the first

local oscillator through the band-pass filter composed of L7 to L9 which minimizes spurious radiation.

Though the regulated voltage for the oscillator is suppled at the level of about 9 volts from Q15 of the main unit, it is further stabilized by the constant current circuit using Q4(2SK19) and by the Zener diode D2(WZ056), and this voltage is supplied to Q1, Q2 and RIT circuit to further ensure sufficient frequency stability.

In the RIT circuit, the capacity of D1(MV201) to which a signal from R2, RIT control, is given through R5, is changed. To D1, C5, variable capacitor, C6 and C30 are connected in sereis, which keeps the RIT shift to 2.5KHz.

ADJUSTMENT OF VARIOUS SECTIONS

This set is completely adjusted and checked at the factory so that it functions correctly. During prolonged use, however, the preadjusted condition might be affected by wear of parts, etc. If it is necessary to make adjustments at some time to regain specified performance, the following procedure may be followed.

Remember that changes in capacitor or coils will be very small, if any. Adjustments should not be attempted without adequate test equipment.

VXO UNIT ADJUSTMENT

1. Measuring Instruments for Adjustment:
   * RF voltmeter (with above 1V full scale capable of measuring at 150MHz)
   * Frequency counter (capable of measuring 130MHz)
   * Multimeter, 20Kohm per volt.
2. Frequency Adjustment:
   a. Connect the frequency counter to J3 of the VXO unit, with the ground connected to J2.
   b. Place the RIT in the center position. Set the crystal switch to the position of the crystal to be aligned.
   c. Set the tuning dial to "100", and adjut the appropriate coil untill the frequency shown in the chart is obtained.
   d. Next set the dial to 200 and adjust trimmer A for the proper frequency according to the chart.
   e. Set the dial now to "O" and adjust trimmer B for the proper frequency.
   f. Repeat the adjustment above till no further adjustment is necessary to get the proper frequencies at all three points.

Crystal No.	Dial		
	0	100	200
36-1	133.3015 MHz	133.4015 MHz	133.5015 MHz
36-2	133.5015	133.6015	133.7015
36-3	133.7015	133.8015	133.9015
36-4	133.9015	134.0015	134.1015
36-5	134.1015	134.2015	134.3015
36-6	135.1015	135.2015	134.3015

Xtal No.	Center Freq.	Range	Type	Basic Freq.
36-1	144.100 MHz	144.000–144.200 MHz	HC-18/U	14848.83 KHz*
36-2	144.300	144.200–144.400	HC-18/U	14871.06
36-3	144.500	144.400–144.600	HC-25/U	14893.28
36-4	144.700	144.600–144.800	HC-25/U	14915.50
36-5	144.900	144.800–145.000	HC-25/U	14937.72
36-6	145.900 MHz	145.800–146.000 MHz	HC-25/U	15048.83 KHz**

* Supplied in the transceiver

** For OSCAR use.

Note: a. CL is 20 PF, with regard to the crystal load capacitance.

b. The frequency of the crystal oscillator (basic frequency) does not correspond to the oscillation frequency in the circuit.

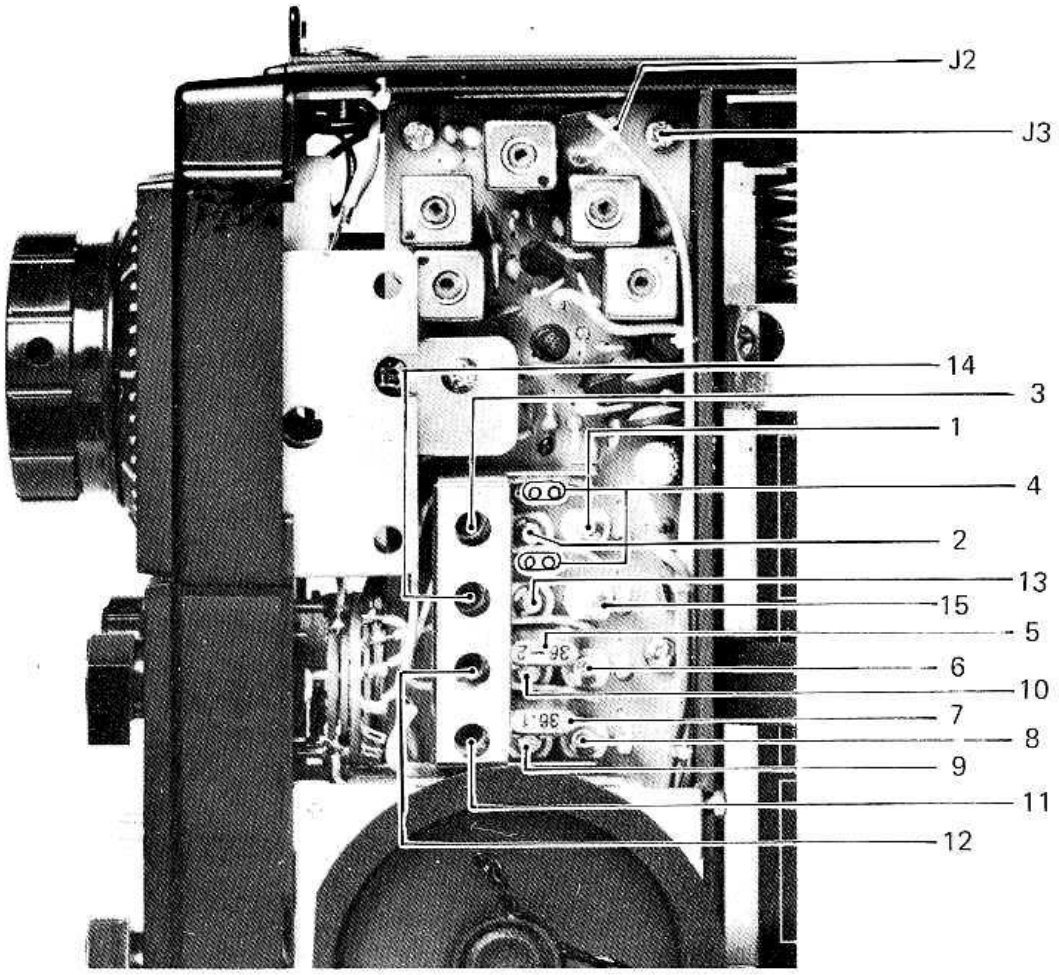

1. Trimmer (b) for the "B" band
2. Trimmer (a) for the "B" band
3. Coil for the "B" socket
4. Additional Crystal Sockets "A" and "B"
5. Crystal for 144.2 MHz band
6. Trimmer (b) for 144.2 MHz band
7. Crystal for 144.0 MHz band
8. Trimmer (b) for 144.0 MHz band
9. Trimmer (a) for 144.0 MHz band
10. Trimmer (a) for 144.2 MHz band
11. Coil for 144.0 MHz band
12. Coil for 144.2 MHz band
13. Trimmer (a) for "A" band
14. Coil for the "A" band
15. Trimmer (b) for the "A" band

ADJUSTMENTS ON MULTIPLIER STAGES

In receiving, set the crystal selector to "144.2" and the tuning knob to the "200" position (The receiving frequency is 144.4MHz). A multimeter (on 3 volt range) is connected to the check point of R15 and tune L5 and L16 to maximum.
After that, the probe of a RF voltmeter is connected to the output terminal J3 of VXO and tune L7 to L9 to maximum. Further, readjust L5 and L6 and repeat this procedure to obtain the maximum indication of the RF voltmeter (250 - 300 mV).

RIT ADJUSTMENT

In the receive mode connect the frequency counter to J3, set the RIT knob to the center (detent) then record the frequency. (The dial scale may be set at any position but do not change it during the adjustment).

Next, turn the MODE change-over switch to "CW-T" without connecting the key to the key jack, then read out the frequency. If it differs from the previously recorded frequency, adjust R98 on the main base plate to equalize both frequencies.

Repeat above adjustments to reduce the frequency difference between reception and transmission to under 10Hz.

TRANSMITTING SECTION ADJUSTMENT

a. **Measuring Instruments for Adjustment**

* Terminal wattmeter (for about 10W full scale with 50 impedence)
* Frequency counter
* RF voltmeter
* AF oscillator
* AF millivoltmeter
* Multimeter 20Kohm per volt

b. **Final Stage Idle Current Adjustment**

Turn the MODE change-over switch to "CW-T" without connecting the key to the key jack. Remove the solder of C136 and W22, and connect the multimeter, which is set at 100mA range, between these points. Adjust R90 so that the current becomes 30mA.
After the adjustment, solder the leads of C136 and W22.

c. **Coils Adjustment**

Connect the wattmeter to the external antenna socket, and set the transmit/receive frequency at "144.4MHz".
With the MODE change-over switch turned to "CW-T", connect the key to the key jack and hold down the key, connect the RF volt-meter probe to the check point of R81 and adjust the cores of L14 to L19 alternately for a maximum voltmeter reading.

d. **Driving and Final Stage Adjustments**

Make sure that the power voltage is 13.8V under the same condition as in 3, then fully turn the R92 rotor toward ground (to panel face) and adjust C120, C121, C127, C128, C137 and C138 so that the wattmeter indicates maximum (over 3W).
After this adjustment, adjust R92 so that the wattmeter indicates 3W.

Set multimeter to volt range and connect to the check point R105.
Readjust L14 to L19 for maximum indication.

e. **RF Meter Adjustment**
Move D22 with respect to L26 (coupling) so that the meter indicates about 90% of full scale when the output is 3W at the completion of adjustment d.

f. **Carrier Frequency Adjustment**
In the receive condition, connect the frequency counter to the R28 check-point, and adjust C61 so that the frequency becomes 10.6985MHz. At this time, make sure that if the MODE change-over switch is turned to "CW-T", the frequency shifts about 1KHz upward. Then turn the MODE change-over switch to "REC" and connect the AF oscillator to the check point, R68.
Ground the mike plug socket pin No.2 for SSB transmission, and set the AF oscillator oscillation frequency at 1.5KHz and adjust the output level so that transmission output is 2.5W. Keeping this output level unchanged, alternately change the audio oscillator frequency from 300Hz to 3KHz, and fine adjust C61 to equalize the transmission outputs.

g. **Mike! ain Adjustment**
Connect the AF oscillator between the mike plug socket pins No.1 and No.4 (toward ground) and set its frequency at 1.5KHz and output level at 6mV.

Ground the mike plug socket pin No.2 and connect the AF millivoltmeter (300mV range to the R68 check point and adjust R61 so that the meter reads 150mV. This adjustment can be slightly changed according to the use of microphone, strength of voice, condition of etc. Observation on a high frequency oscilloscope set to observe the output carrier would be helpful while using normal microphone procedures in order to achieve optimum waveform and quality.

RECEIVING SECTION ADJUSTMENT

a. **Measuring Instruments for Adjustment**
* Standard signal generator (for 144MHz band)
* AF millivoltmeter
* Multimeter

b. **Sensitivity Adjustment**
With the receiving frequency set at 144.4MHz and the volume(vol) knob in a reasonable volume position, connect the standard signal generator to the antenna connector and the AF millivoltmeter(1V range) to the AF output terminals J4 and J5 (toward ground).
Never transmit during this adjustment because it may damage the signal generator attenuators.

Keeping the signal generator unmodulated, set the output level at about 30dB(μV) and adjust the generator frequency to the receiving frequency. As beat is heard from the speaker, fine-adjust the signal generator frequency or receiving frequency so that the beat becomes about 1000Hz. Try to keep the beat at this frequency during the adjustment.

Next, adjust L1-L10 cores successively to maximize the AF millivoltmeter indication, and if the AF millivoltmeter becomes full-scale, lower the signal generator output level without converting the meter range or turning the volume knob, etc. Repeat the adjustment until the AF millivoltmeter indicates over 800mV with the volume knob at maximum and S+N/N becomes over 10dB when the signal generator output level is -10dB (μV).

c. **S Meter Adjustment**

Adjust R48 so that the S meter indicates zero in the non-signal condition. Next, with the signal generator output level set at 90dB (μV), adjust the frequency to the receiving frequency, and adjust R50 so that the S meter indicates full scale. After this adjustment is finished, lower the signal generator output level, and make sure that the signal generator output is within a range of 0dB ± 3dB when the S meter indicates S5.

d. **Noise Blanker Adjustment**

Set the signal generator output level at about 30dB (μV), and adjust the frequency to the receiving frequency. Making sure that the beat is generated from the speaker, connect the multimeter (0.3V range) to the R39 check-point, and gradually lower the signal generator output level and adjust the L12 to a point where the tester indication is maximum.

SECTION VIII INSIDE VIEW

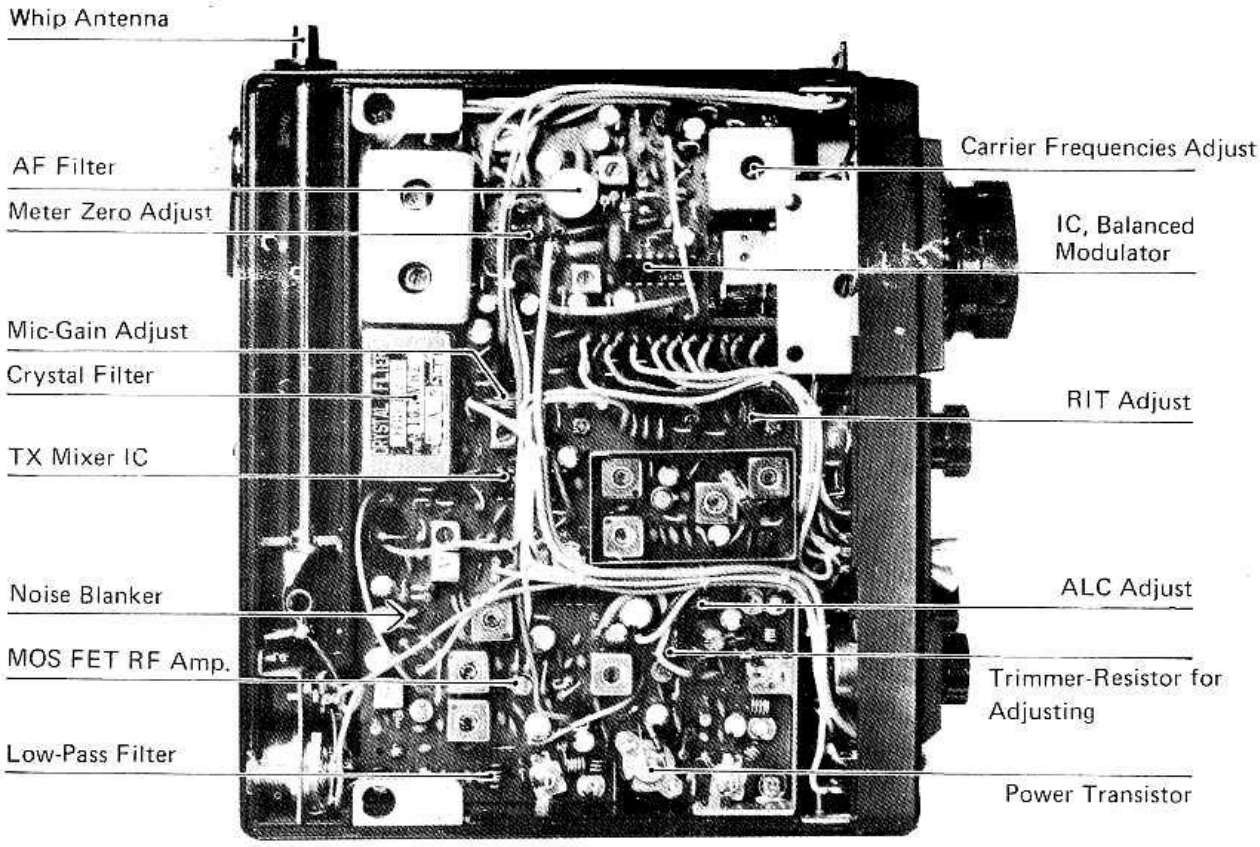

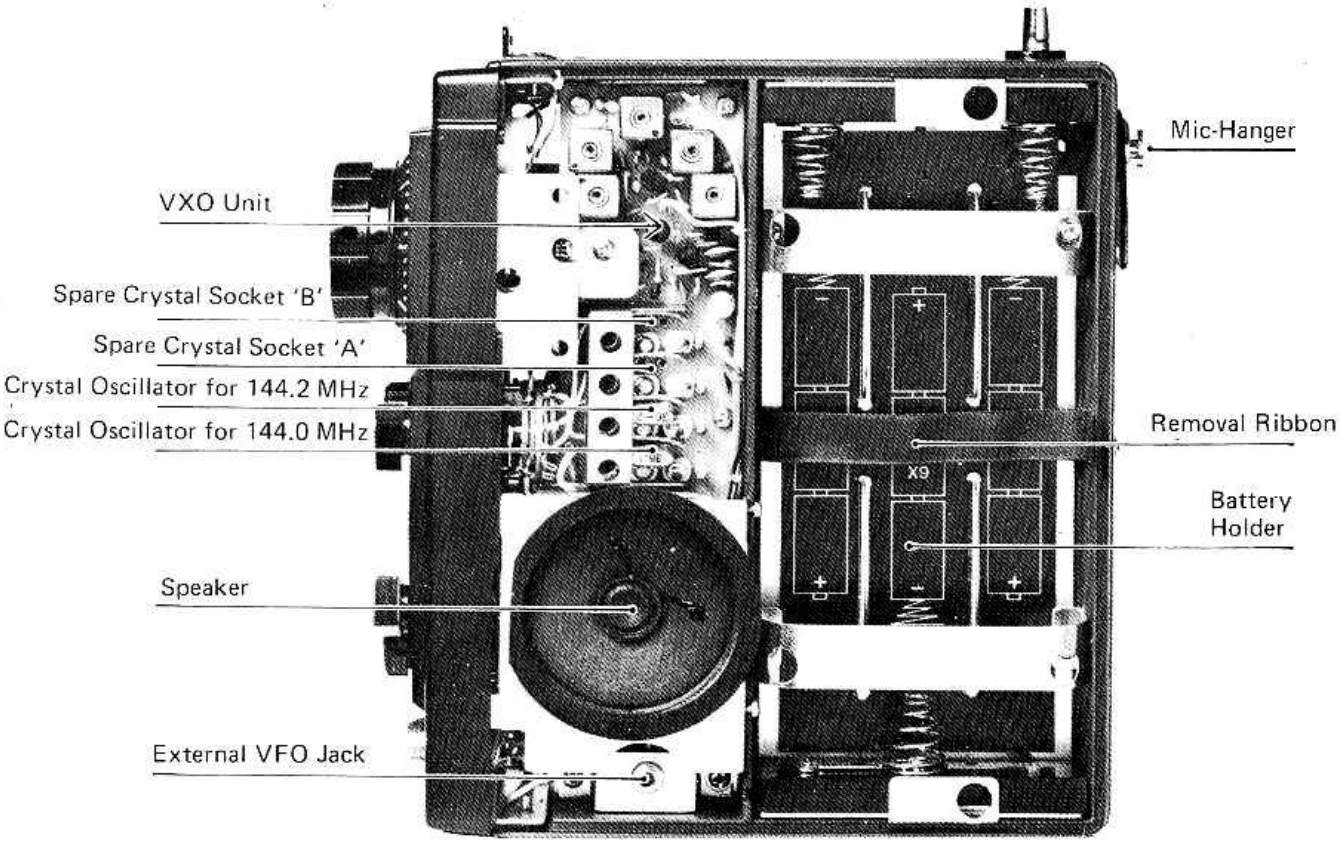

SECTION IX BLOCK DIAGRAM

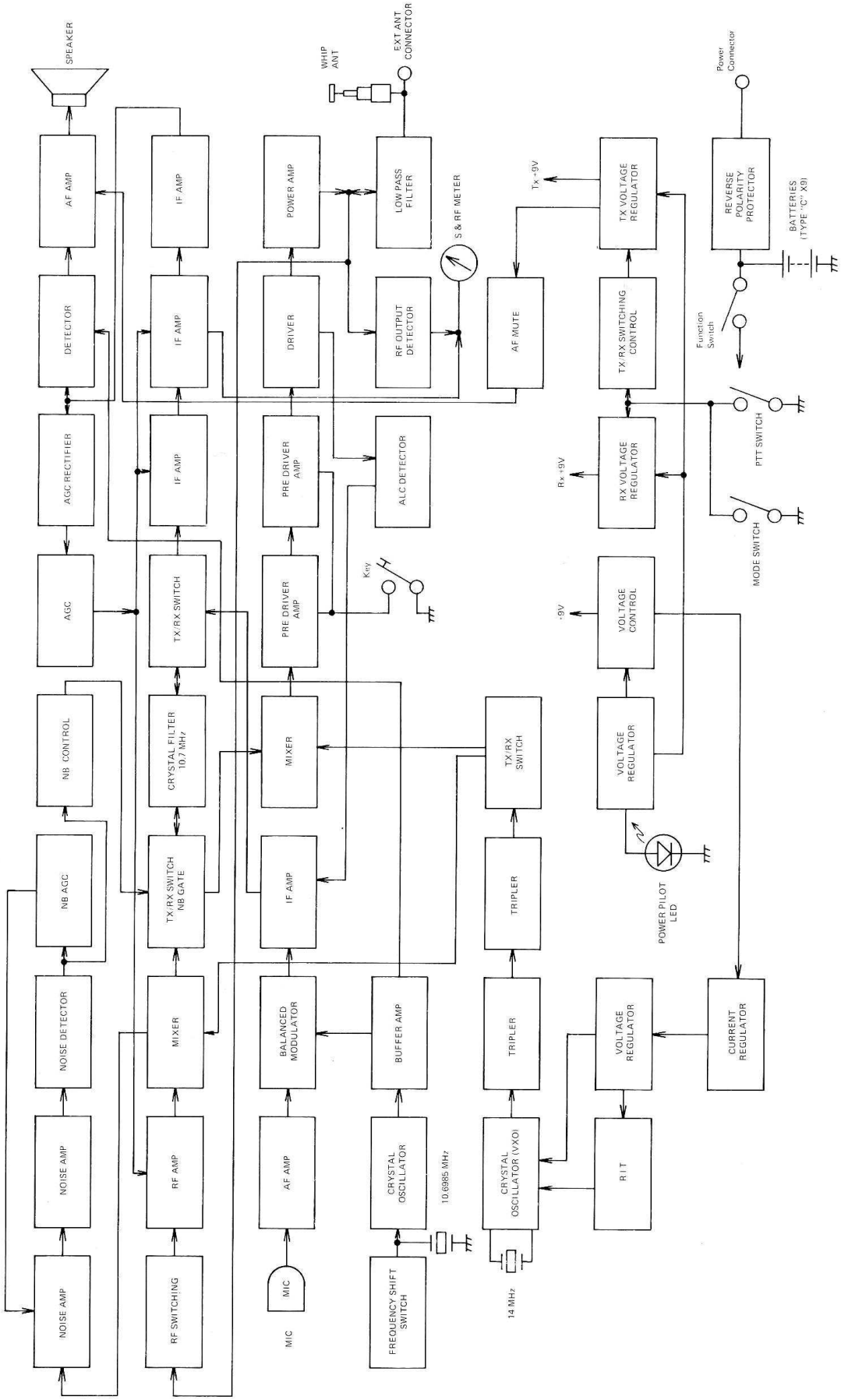

INOUE COMMUNICATION EQUIPMENT CORPORATION

NO 6—19, 1 CHOME, KAMI KURATSUKURI, HIRANO-KU,
OSAKA JAPAN