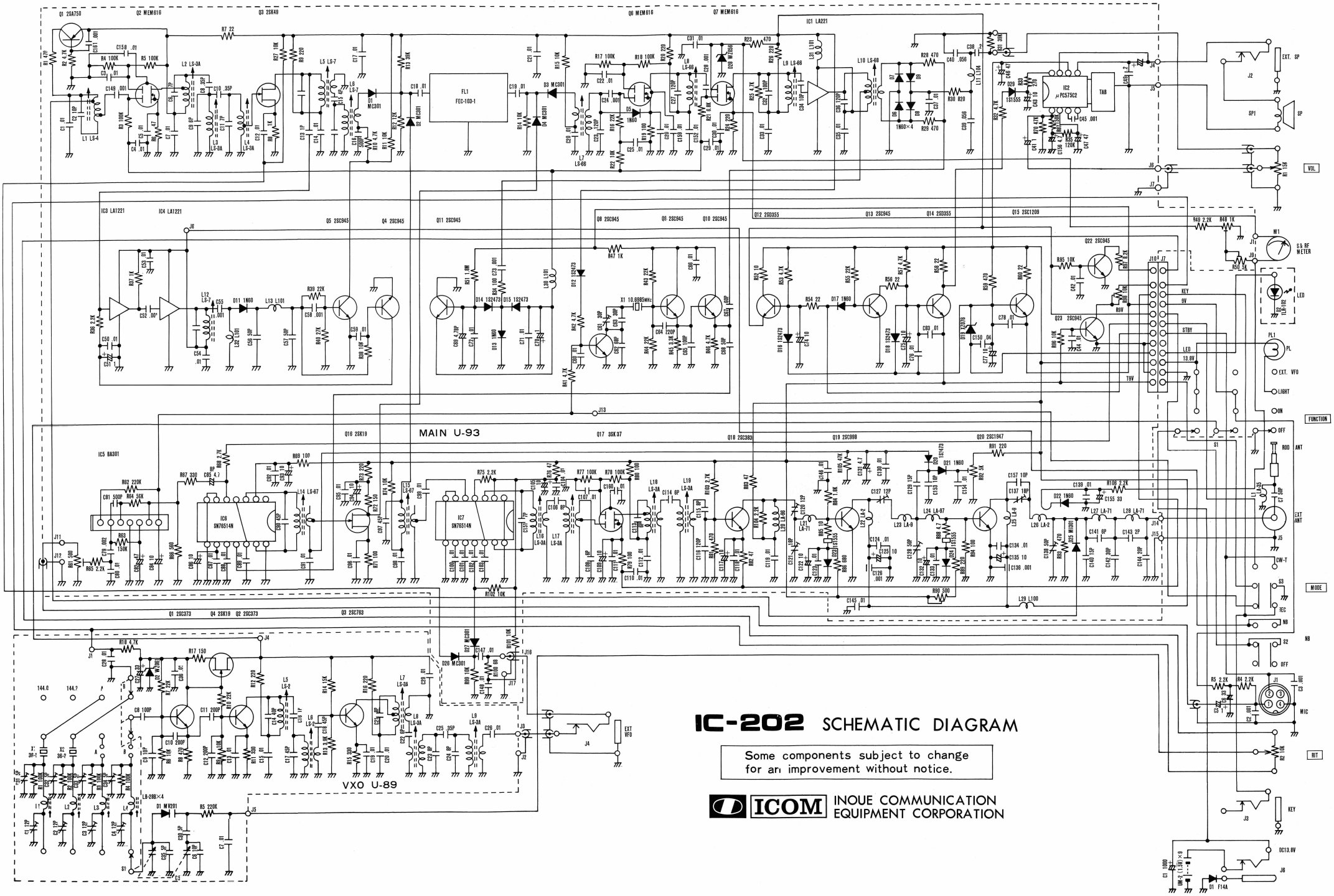

IC-202 SCHEMATIC DIAGRAM

Some components subject to change for an improvement without notice.

ICOM INOUE COMMUNICATION EQUIPMENT CORPORATION